robern®

THE COLLECTION BROCHURE

IN THIS ROOM The Collection shower enclosure featuring the Hemingway™ frame in Polished Stainless Steel

THE COLLECTION

Beyond a wide variety of lighted mirror options, The Collection has expanded into a comprehensive selection of solutions for hospitality and multifamily projects—including a stunning array of shower enclosures, shower hardware and magnification mirrors—to create luxury bathing experiences that are second to none.

2 Lighted Mirrors

10 Shower Enclosures & Hardware

18 Magnification Mirrors

20 Prominent Installations

LIGHTED MIRRORS

The perfect choice for large-scale projects, The Collection lighted mirror series thoughtfully encompasses the uncompromising light quality, modern design elements, and precision engineering Robern is known for.

QUALITY CONSTRUCTION & EASY INSTALLATION

Every lighted mirror is crafted with durable aluminum construction, built-in diffusers and fully encased LEDs and electrical components. Another key feature includes the Plug and Hang™ System, to make installation effortless.

IN THIS ROOM The Collection glow lighted mirror

140+ STANDARD OPTIONS, 42 SIZES AND 7 PATTERNS

We offer a wide array of sizes and seven lighting patterns, including ambient glow lighting, edge lighting and perimeter lighting. With more than 140 unique options for easy ordering, select the perfect lighted mirror for your project.

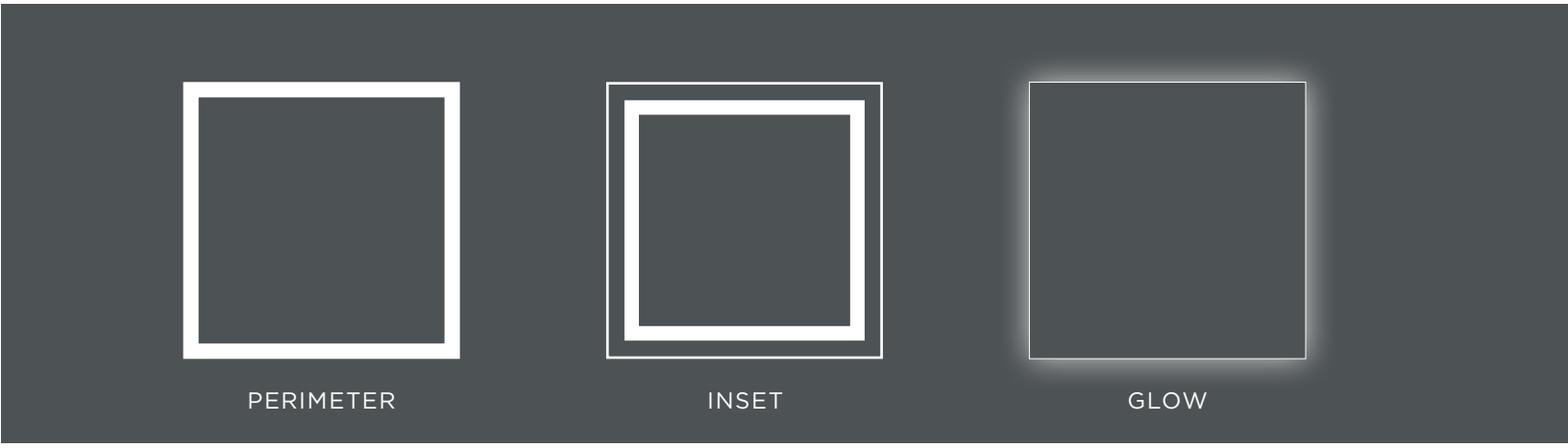

PERIMETER INSET GLOW

24" × 36" CM2436RPFPNANU	**24" × 36"** CM2436RIFPNANU	**24" × 36"** CM2436RGFPNANU
24" × 42" CM2442RPFPNANU	**24" × 42"** CM2442RIFPNANU	**24" × 42"** CM2442RGFPNANU
24" × 48" CM2448RPFPNANU	**24" × 48"** CM2448RIFPNANU	**24" × 48"** CM2448RGFPNANU
36" × 36" CM3636RPFPNANU	**36" × 36"** CM3636RIFPNANU	**36" × 36"** CM3636RGFPNANU
36" × 42" CM3642RPFPNANU	**36" × 42"** CM3642RIFPNANU	**36" × 42"** CM3642RGFPNANU
36" × 48" CM3648RPFPNANU	**36" × 48"** CM3648RIFPNANU	**36" × 48"** CM3648RGFPNANU
42" × 36" CM3642RPFPNANU	**42" × 36"** CM3642RIFPNANU	**42" × 36"** CM3642RGFPNANU
42" × 42" CM4242RPFPNANU	**42" × 42"** CM4242RIFPNANU	**42" × 42"** CM4242RGFPNANU
42" × 48" CM4248RPFPNANU	**42" × 48"** CM4248RIFPNANU	**42" × 48"** CM4248RGFPNANU

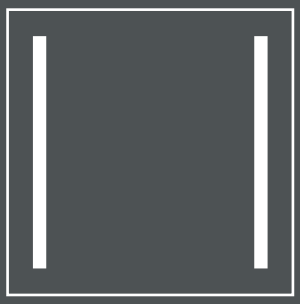

COLUMN

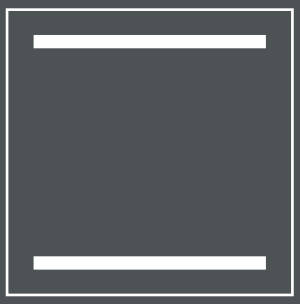

HORIZONTAL COLUMN

EDGE LIT

HORIZONTAL EDGE LIT

COLUMN	HORIZONTAL COLUMN	EDGE LIT	HORIZONTAL EDGE LIT
24″ × 36″ CM2436RCFPNANU	36″ × 24″ CM2436RCFPNANU	24″ × 36″ CM2436RSFPNANU	36″ × 24″ CM2436RSFPNANU
24″ × 42″ CM2442RCFPNANU	42″ × 24″ CM2442RCFPNANU	24″ × 42″ CM2442RSFPNANU	42″ × 24″ CM2442RSFPNANU
24″ × 48″ CM2448RCFPNANU	48″ × 24″ CM2448RCFPNANU	24″ × 48″ CM2448RSFPNANU	48″ × 24″ CM2448RSFPNANU
36″ × 36″ CM3636RCFPNANU	36″ × 36″ CM3636RCFPNANU	36″ × 36″ CM3636RSFPNANU	36″ × 36″ CM3636RSFPNANU
36″ × 42″ CM3642RCFPNANU	42″ × 36″ CM3642RCFPNANU	36″ × 42″ CM3642RSFPNANU	42″ × 36″ CM3642RSFPNANU
36″ × 48″ CM3648RCFPNANU	48″ × 36″ CM3648RCFPNANU	36″ × 48″ CM3648RSFPNANU	48″ × 36″ CM3648RSFPNANU
42″ × 36″ CM4236RCFPNANU	36″ × 42″ CM4236RCFPNANU	42″ × 36″ CM4236RSFPNANU	36″ × 42″ CM4236RSFPNANU
42″ × 42″ CM4242RCFPNANU	42″ × 42″ CM4242RCFPNANU	42″ × 42″ CM4242RSFPNANU	42″ × 42″ CM4242RSFPNANU
42″ × 48″ CM4248RCFPNANU	48″ × 42″ CM4248RCFPNANU	42″ × 48″ CM4248RSFPNANU	48″ × 42″ CM4248RSFPNANU

PERIMETER

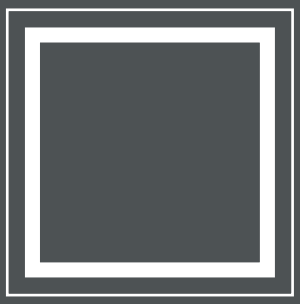

INSET

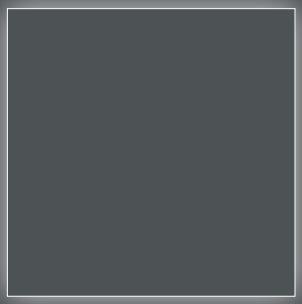

GLOW

48" × 36"	**48" × 36"**	**48" × 36"**
CM3648RPFPNANU	CM3648RIFPNANU	CM3648RGFPNANU
48" × 42"	**48" × 42"**	**48" × 42"**
CM4248RPFPNANU	CM4248RIFPNANU	CM4248RGFPNANU
48" × 48"	**48" × 48"**	**48" × 48"**
CM4848RPFPNANU	CM4848RIFPNANU	CM4848RGFPNANU
54" × 36"	**54" × 36"**	**54" × 36"**
CM5436RPFPNANU	CM5436RIFPNANU	CM5436RGFPNANU
54" × 42"	**54" × 42"**	**54" × 42"**
CM5442RPFPNANU	CM5442RIFPNANU	CM5442RGFPNANU
54" × 48"	**54" × 48"**	**54" × 48"**
CM5448RPFPNANU	CM5448RIFPNANU	CM5448RGFPNANU
60" × 36"	**60" × 36"**	**60" × 36"**
CM6036RPFPNANU	CM6036RIFPNANU	CM6036RGFPNANU
60" × 42"	**60" × 42"**	**60" × 42"**
CM6042RPFPNANU	CM6042RIFPNANU	CM6042RGFPNANU
60" × 48"	**60" × 48"**	**60" × 48"**
CM6048RPFPNANU	CM6048RIFPNANU	CM6048RGFPNANU
66" × 36"	**66" × 36"**	**66" × 36"**
CM6636RPFPNANU	CM6636RIFPNANU	CM6636RGFPNANU
66" × 42"	**66" × 42"**	**66" × 42"**
CM6642RPFPNANU	CM6642RIFPNANU	CM6642RGFPNANU
66" × 48"	**66" × 48"**	**66" × 48"**
CM6648RPFPNANU	CM6648RIFPNANU	CM6648RGFPNANU

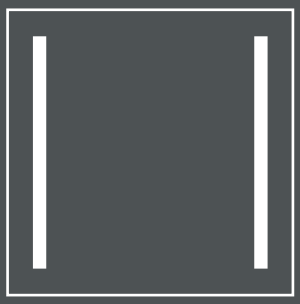

COLUMN

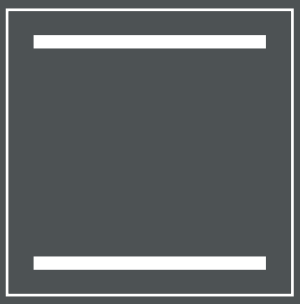

HORIZONTAL COLUMN

EDGE LIT

HORIZONTAL EDGE LIT

COLUMN	HORIZONTAL COLUMN	EDGE LIT	HORIZONTAL EDGE LIT
48" × 36" CM4836RCFPNANU	36" × 48" CM4836RCFPNANU	48" × 36" CM4836RSFPNANU	36" × 48" CM4836RSFPNANU
48" × 42" CM4842RCFPNANU	42" × 48" CM4842RCFPNANU	48" × 42" CM4842RSFPNANU	42" × 48" CM4842RSFPNANU
48" × 48" CM4848RCFPNANU	48" × 48" CM4848RCFPNANU	48" × 48" CM4848RSFPNANU	48" × 48" CM4848RSFPNANU
54" × 36" CM5436RCFPNANU	36" × 54" CM5436RCFPNANU	54" × 36" CM5436RSFPNANU	36" × 54" CM5436RSFPNANU
54" × 42" CM5442RCFPNANU	42" × 54" CM5442RCFPNANU	54" × 42" CM5442RSFPNANU	42" × 54" CM5442RSFPNANU
54" × 48" CM5448RCFPNANU	48" × 54" CM5448RCFPNANU	54" × 48" CM5448RSFPNANU	48" × 54" CM5448RSFPNANU
60" × 36" CM6036RCFPNANU	36" × 60" CM6036RCFPNANU	60" × 36" CM6036RSFPNANU	36" × 60" CM6036RSFPNANU
60" × 42" CM6042RCFPNANU	42" × 60" CM6042RCFPNANU	60" × 42" CM6042RSFPNANU	42" × 60" CM6042RSFPNANU
60" × 48" CM6048RCFPNANU	48" × 60" CM6048RCFPNANU	60" × 48" CM6048RSFPNANU	48" × 60" CM6048RSFPNANU
66" × 36" CM6636RCFPNANU	36" × 66" CM6636RCFPNANU	66" × 36" CM6636RSFPNANU	36" × 66" CM6636RSFPNANU
66" × 42" CM6642RCFPNANU	42" × 66" CM6642RCFPNANU	66" × 42" CM6642RSFPNANU	42" × 66" CM6642RSFPNANU
66" × 48" CM6648RCFPNANU	48" × 66" CM6648RCFPNANU	66" × 48" CM6648RSFPNANU	48" × 66" CM6648RSFPNANU

BEYOND THE COLLECTION

Beyond what The Collection offers, we have options that support your design needs and take you from concept to product specification. Custom options include dimming, defogging, occupancy sensor, night lighting, capacitive-touch control, USB charging, decorative frame options and much more.

IN THIS ROOM Custom lighted mirror with top light bar

CUSTOM SIZES

Custom sizes available in any combination up to 72″ wide and 72″ high.

CUSTOM FRAMING

Add dimension and create a stylish focal point with custom framing options in a variety of metal finishes to complement your design.

TITLE 24 COMPLIANCE

Choose mirrors that are certified as high efficacy, meeting California Title 24 performance requirements for use in both residential and commercial projects.

IDEAL LIGHTING

- DIMMABLE LED. Select the ideal brightness for any task with continuously dimmable brightness to 1%.
- CAPACITIVE-TOUCH CONTROL. On-mirror and off-mirror controls available.
- LED COLOR TEMPERATURE. Customize your Kelvin color temperature to provide warm mood lighting or cool, energizing task lighting.

WARMER COOLER

DEFOGGER

Defogging technology ensures a clear reflection, so a steamy shower won't interfere with the morning routine.

ADDITIONAL CUSTOM OPTIONS

- OCCUPANCY SENSOR
- NIGHT LIGHT
- USB CHARGING
- DIGITAL CLOCK

IN THIS ROOM The Collection shower enclosure featuring the Hemingway frame in Polished Stainless Steel

SHOWER ENCLOSURES & HARDWARE

Available in three statement-making designs and two finish choices, The Collection's handcrafted framed shower enclosures introduce a distinctive and dramatic showpiece to the bathing environment.

For frameless shower solutions, hardware is available in several styles and coordinating finishes to complement the overall space.

Frame detail of The Collection shower enclosure

HANDCRAFTED CONSTRUCTION & CUSTOMIZABLE OPTIONS

Each framed enclosure design—Yeats™, Parker™ and Hemingway™—is meticulously handcrafted from stainless steel to ensure durability over time. Additional enhancements are available to create a truly custom shower solution.

FRAME STYLES

YEATS™
¾" FRAME WIDTH

PARKER™
1" FRAME WIDTH

HEMINGWAY™
1" FRAME AND GRILLE WIDTH

FRAME FINISHES

POLISHED STAINLESS STEEL

CARBON BLACK

Panel design features grilles that are snapped onto the interior of the glass with the ability to remove these bars for ease of shower cleaning.

SHOWER DOOR OPTIONS

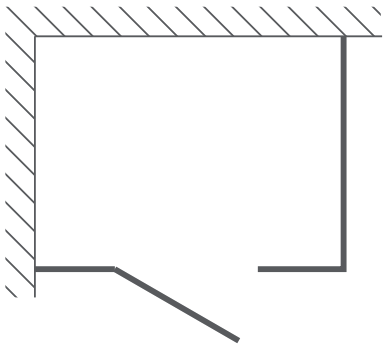

HINGED DOOR

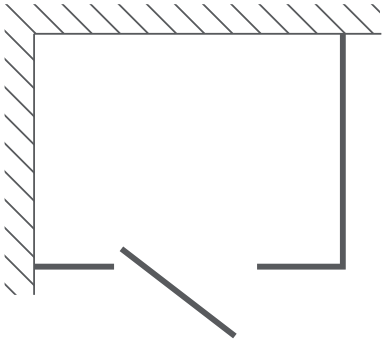

PIVOT DOOR

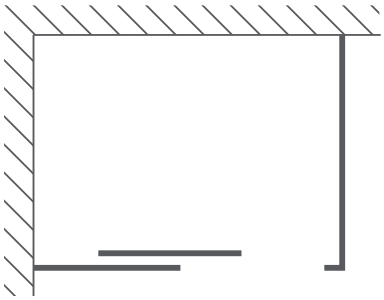

SLIDING DOOR

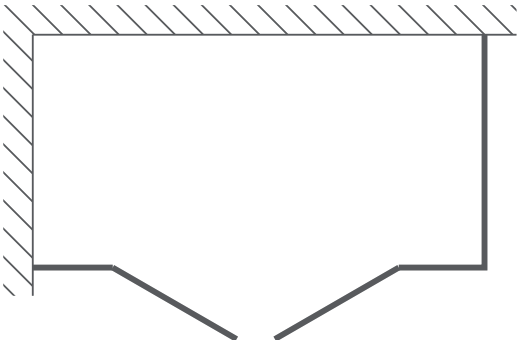

HINGED FRENCH DOORS

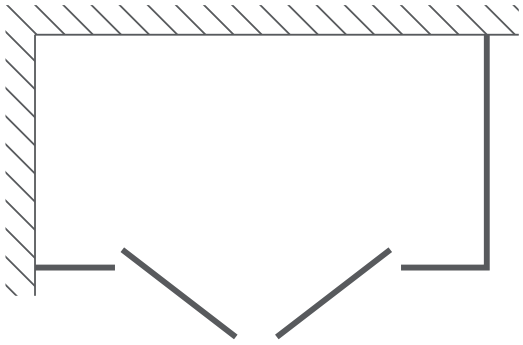

PIVOT FRENCH DOORS

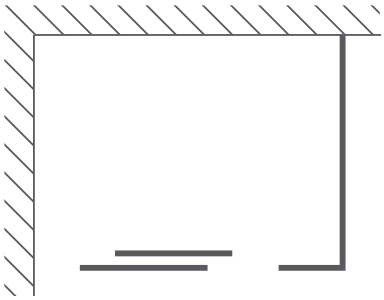

BYPASS DOOR

FIXED PANEL

SAMPLE CONFIGURATIONS

To serve as inspiration for your next project, we present three sample shower configurations at varying price points.

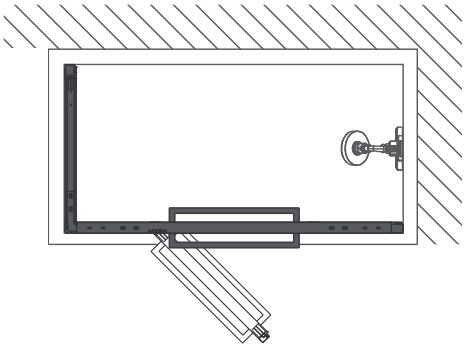

CONFIGURATION 1

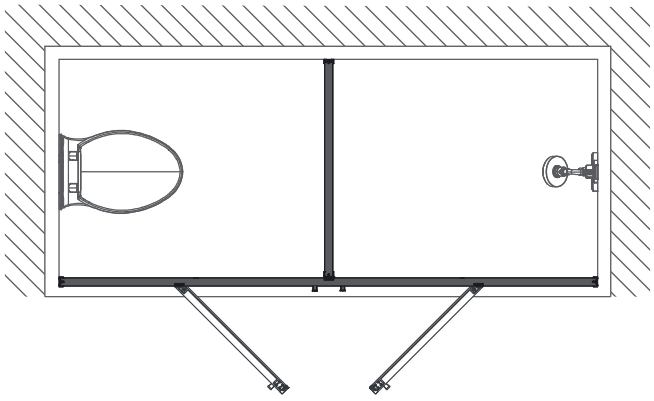

CONFIGURATION 2

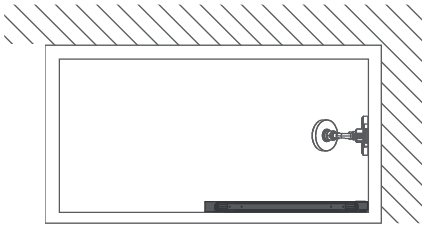

CONFIGURATION 3

CUSTOM OPTIONS

If project design needs require a product outside of semi-custom offering, custom solutions are available. Contact us at **custom@robern.com** for more information.

- Frame width and finish options
- Grille width and design options (contour, beaded, single-sided grilles and more)
- Soft-close, self-close or slow-close options
- Handle design options
- Glass options
  - Tinted and decorative glass
  - ½" tempered glass
  - Clear glass with a low iron glass option for an ultra-clear view
  - A glass treatment for repelling water for ease of cleaning
- A variety of shower hardware

HARDWARE STYLES

Shower hardware is available in four finishes and includes knobs, cast handles, fabricated handles along with hinges and brackets for frameless designs.

Knobs

ROUND KNOB

SQUARE KNOB

Cast Handles

SINGLE-SIDED HANDLE

BACK-TO-BACK ROUNDED HANDLE

BACK-TO-BACK SQUARED HANDLE

Fabricated Handles

SINGLE-SIDED HANDLE

SINGLE-SIDED LADDER HANDLE

BACK-TO-BACK HANDLE

BACK-TO-BACK ROUNDED HANDLE

BACK-TO-BACK PULL HANDLE

BACK-TO-BACK LADDER HANDLE

HARDWARE FAMILIES

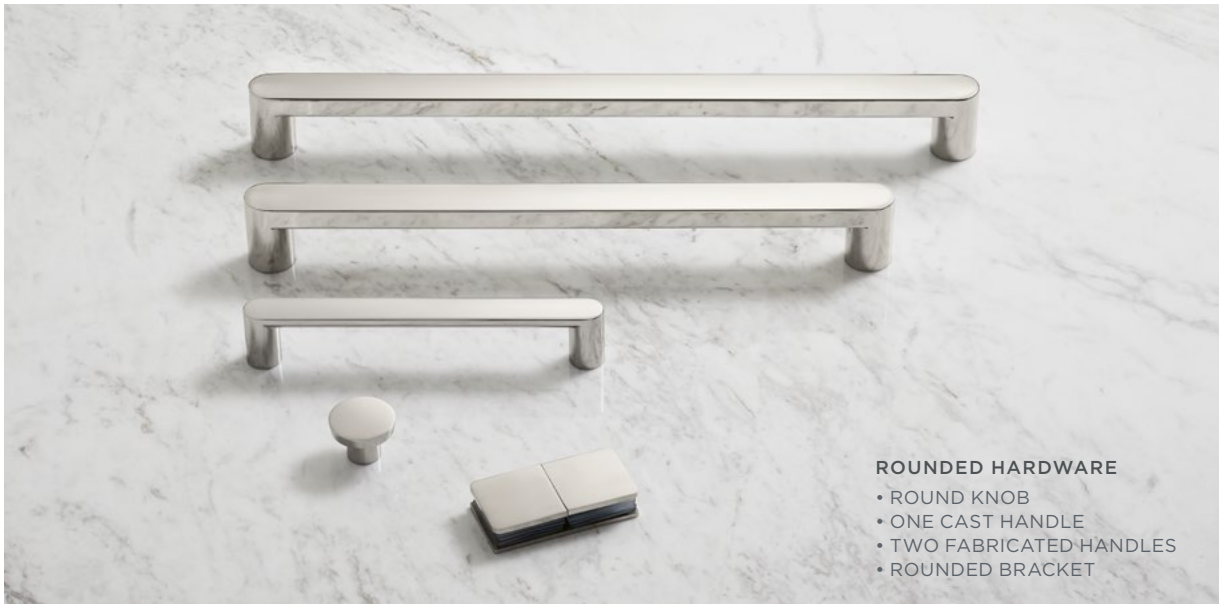

ROUNDED HARDWARE
- ROUND KNOB
- ONE CAST HANDLE
- TWO FABRICATED HANDLES
- ROUNDED BRACKET

SQUARED HARDWARE
- SQUARE KNOB
- ONE CAST HANDLE
- THREE FABRICATED HANDLES
- SQUARED BRACKET

HARDWARE FINISHES

CHROME

POLISHED NICKEL

BRUSHED FRENCH GOLD

CARBON BLACK

MAGNIFICATION MIRRORS

To complement The Collection assortment—and further elevate the bathing experience— magnification mirrors are available in wall-mount and freestanding designs and in five coordinating finishes.

The Collection wall-mount magnification mirror in Chrome

MAGNIFICATION STYLES

Installation Types
• Wall-mount • Freestanding

Mirror Shapes
• Round • Rectangular

Frame Options
• Framed • Unframed

Magnification Options
• 3x • 5x

Lighting Options
• Unlit • Lit (LED)

Lighting Temperature
• 3000K–6500K

MAGNIFICATION MIRROR FINISHES

CHROME | BRUSHED NICKEL | POLISHED GOLD | BRUSHED BRONZE | MATTE BLACK

PROMINENT INSTALLATIONS

CONTIGUOUS UNITED STATES

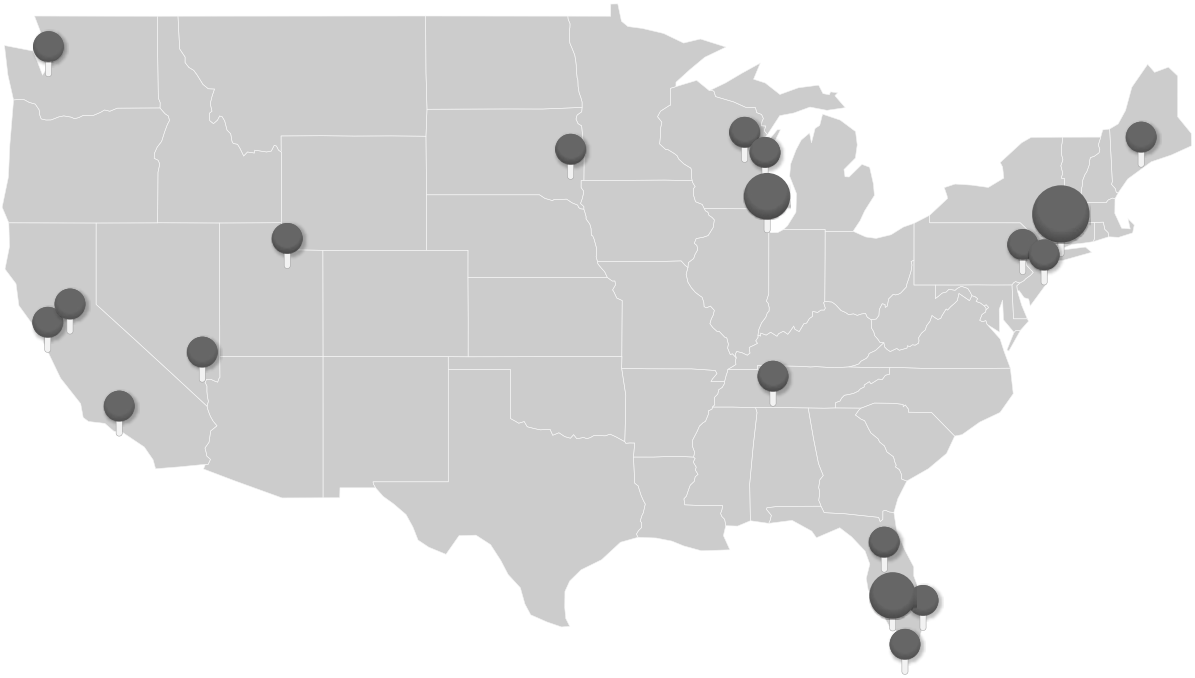

HAWAII, U.S.

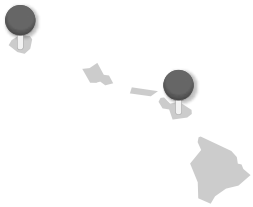

GLOBAL

- Barbados
- Canada
- Cayman Islands

PROJECT INSTALLATIONS

PROJECT	LOCATION
Century Towers	Century City, CA
Wilder Luxury Home	Orinda, CA
706 Mission	San Francisco, CA
Santa Monica Village	Santa Monica, CA
Bella Maré	Aventura, FL
Peninsula Condos	Aventura, FL
St. Regis	Bal Harbour, FL
Florencia at the Colony	Bonita Springs, FL
Tavira at Bonita Bay	Bonita Springs, FL

PROJECT	LOCATION
Marina Lagoon	Key Largo, FL
Westin Vistana Village Resort	Key West, FL
Veranda Beach Club	Longboat Key, FL
AQUA Allison Island	Miami, FL
Mosaic	Miami Beach, FL
Bentley Village	Naples, FL
Fiddler's Creek	Naples, FL
Seasons at Naples Cay	Naples, FL
St. Tropez	Naples, FL

PROJECT	LOCATION
Sheraton Vistana Villages	Orlando, FL
Westin Princeville Ocean Resort	Kauai, HI
Ocean Villas	Maui, HI
Westin Ka'anapali Resort	Maui, HI
City Site	Chicago, IL
Trump Towers	Chicago, IL
Wanda Vista	Chicago, IL
99 Franklin Street	Bangor, ME
99 Hudson	Jersey City, NJ
380 Newark Avenue	Jersey City, NJ
The Lofts at Pier Village	Long Branch, NJ
Hulfish North	Princeton, NJ
Avora	Weehawken, NJ
Churchill Casino	Las Vegas, NV
Mandarin Oriental Residences	Las Vegas, NV
2439 38th Street	Astoria, NY
153 Green Street	New York, NY
205 Freeman Street	New York, NY
651 Bushwick	New York, NY
856 Washington Avenue	New York, NY
1048 Manhattan Avenue	New York, NY
Boro Park Complex	New York, NY
Element 88	New York, NY
Union Street	New York, NY
1010 Park Avenue	New York, NY
1059 3rd Avenue	New York, NY
10 Madison Square West	New York, NY
30 E 31st Street	New York, NY
56 Leonard Street	New York, NY
80/81 Street	New York, NY
92 Morningside Drive	New York, NY
99 Church Street	New York, NY
108 Chambers Street	New York, NY

PROJECT	LOCATION
139 E 23rd Street	New York, NY
220 Central Park South	New York, NY
601 Washington	New York, NY
AKA Hotel	New York, NY
Chelsea Green	New York, NY
Colorado NYC	New York, NY
Columbia Condos	New York, NY
Columbia University	New York, NY
Executive Hotel Le Soleil	New York, NY
Manhattan House	New York, NY
New School	New York, NY
NYU	New York, NY
Peter Cooper Village	New York, NY
Printing House	New York, NY
Soho Lofts	New York, NY
The Lara	New York, NY
University Place	New York, NY
West End Avenue	New York, NY
10 Rittenhouse Square	Philadelphia, PA
The Icon	Philadelphia, PA
Best Western Plus Lakeview	Madison, SD
Best Western Plus Music Row	Nashville, TN
St. Regis Deer Crest Resort	Park City, UT
Spire Seattle	Seattle, WA
The American Club® Carriage House	Kohler, WI
Booth Street Condos	Milwaukee, WI
Straits Chapel	Sheboygan, WI
Fin Grand Cayman	Cayman Islands
Coast Tsawwassen Inn	Delta, British Columbia
Port Ferdinand Luxury Resort & Residences	St Peter, Barbados

217-1372 ©2020 by Robern, Inc.